BRUCE'S CUSTOM COVERS
A division of Aircraft Covers, Inc.

18850 Adams Ct
Morgan Hill, CA 95037
www.AircraftCovers.com

Phone: 408/738-3959
Toll Free (U.S.): 800/777-6405
Fax: 408/738-2729
Email: bruce@aircraftcovers.com

manufacturer of the finest custom-made aircraft covers

Tech Sheet: Cessna 150 & 152

(cessna-150.pdf)



Cessna 150 Wrap-Around Canopy Cover, Early Models

Section 1: Canopy/Cockpit/Fuselage Covers

Canopy Covers help reduce damage to your airplane's upholstery and avionics caused by excessive heat, and they can eliminate problems caused by leaking door and window seals. They keep the windshield and window surfaces clean and help prevent vandalism and theft.

The **Cessna 150 & 152 Canopy Cover** is custom designed and fit for each model as well as your aircraft's specific antenna and possible temperature probe placements. The Canopy Cover is designed to enclose the windshield, side and rear window area. The Canopy Cover is a one-piece design, which wraps around the canopy and closes with Velcro behind the pilot's side door. The Velcro closure allows entry to the airplane without removing the entire cover. The Canopy Cover also attaches by two belly straps, one under the engine cowling and one under the tailboom. Belly straps are adjustable and detachable from either side using heavy-duty quick release plastic buckles. The buckles are padded to prevent scratching. To ensure the most secure fit, high-quality shock cord is enclosed in the hem of the cover to help keep the cover tighter against the airplane. Canopy Covers are commonly referred to as Cabin Covers, Fuselage Covers, Canvas Covers, etc.

Each Canopy Cover is custom sewn and the corners are trimmed to match the colors of the airplane. The airplane's registration number can be imprinted onto both sides of the cover for an additional charge. A duffle bag is included with all Canopy Covers.

This cover type is made from Silver Acrylic Sunbrella canvas and is 100% lined with a soft and smooth microfiber. Bruce's Custom Covers developed this material combination especially for aircraft protection. The outer material is medium weight and treated for water resistance, UV resistance and anti-static buildup. The inner lining is a very soft and smooth microfiber to prevent scratching. The material is very reflective, and tests show that the cabin interior temperature can be reduced to near-ambient temperature on

the hottest of days. It is water, ice and snow repellent, yet breathable to allow moisture to escape from between the cover and the aircraft surface.

Extended Canopy/Engine Covers are one-piece covers (100% lined with microfiber) that are a combination of the Extended Canopy Cover and Engine Cover. This cover will enclose the engine cowl and will extend aft to cover all of the windows. It will also extend down the side of the airplane further than the normal Canopy/Engine Cover.

This cover type is made from Silver Acrylic Sunbrella canvas and is 100% lined with a soft and smooth microfiber. Bruce's Custom Covers developed this material combination especially for aircraft protection. The outer material is medium weight and treated for water resistance, UV resistance and anti-static buildup. The inner lining is a very soft and smooth microfiber to prevent scratching. The material is very reflective, and tests show that the cabin interior temperature can be reduced to near-ambient temperature on the hottest of days. It is water, ice and snow repellent, yet breathable to allow moisture to escape from between the cover and the aircraft surface.

The **Cessna 150 & 152 Canopy/Engine Cover** is a one-piece cover (100% lined with microfiber) that is a combination of the Canopy Cover and Engine Cover. This cover will enclose the engine cowl and will extend aft to cover all of the windows. This cover type is made from Silver Acrylic Sunbrella canvas and is 100% lined with a soft and smooth microfiber. Bruce's Custom Covers developed this material combination especially for aircraft protection. The outer material is medium weight and treated for water resistance, UV resistance and anti-static buildup. The inner lining is a very soft and smooth microfiber to prevent scratching. The material is very reflective, and tests show that the cabin interior temperature can be reduced to near-ambient temperature on the hottest of days. It is water, ice and snow repellent, yet breathable to allow moisture to escape from between the cover and the aircraft surface.

The **Cessna 150 & 152 Over-The-Top Style Canopy Cover** encloses the windshield, side and rear windows, and extends over the top of the airplane to cover the section between the wings. This is a one-piece design, which wraps around the canopy and closes with a Velcro closure behind the pilot's side door, and at the same place on the copilot's side of the cabin. By opening the Velcro closure on the door side, one can enter the airplane without removing the entire cover. The cover will extend over the top of the cabin area to cover the wing root fairings to help protect against leaks. The cover fastens with two belly straps that are adjustable and detachable from either side with heavy-duty quick-release plastic buckles. To keep the sides of the cover snug, special tightening straps are sewn onto the upper hem on each side. To ensure the most secure fit, high-quality shock cord is enclosed in the hem of the cover to help keep the cover tighter against the airplane. Canopy Covers are commonly referred to as Cabin Covers, Fuselage Covers, Canvas Covers, etc.

Each Canopy Cover is custom sewn and the corners are trimmed to match the colors of the airplane. The airplane's registration number can be imprinted onto both sides of the cover for an additional charge. A duffle bag is included with all Canopy Covers.

This cover type is made from Silver Acrylic Sunbrella canvas and is 100% lined with a soft and smooth microfiber. Bruce's Custom Covers developed this material combination especially for aircraft protection. The outer material is medium weight and treated for water resistance, UV resistance and anti-static buildup. The inner lining is a very soft and smooth microfiber to prevent scratching. The material is very reflective, and tests show that the cabin interior temperature can be reduced to near-ambient temperature on the hottest of days. It is water, ice and snow repellent, yet breathable to allow moisture to escape from between the cover and the aircraft surface.

The **Extended Canopy Cover, Over-The-Top Style** wraps around the airplane to cover all of the windows, extends over the top of the airplane to cover the section between the wings, and extends down to the main wheel struts to cover the entire side of the airplane. The cover will extend over the top of the cabin area to cover the wing root fairings to help protect against leaks. The cover fastens with two belly straps that are adjustable and detachable from either side with heavy-duty quick-release plastic buckles. To keep the sides of the cover snug against your Cessna 150 & 152, special tightening straps are sewn onto the upper hem on each side. To ensure the most secure fit, high quality shock cord is enclosed in the hem of the cover to help keep the cover tighter against the airplane. Canopy Covers are commonly referred to as Cabin Covers, Fuselage Covers, Canvas Covers, etc.

This cover type is made from Silver Acrylic Sunbrella canvas and is 100% lined with a soft and smooth microfiber. Bruce's Custom Covers developed this material combination especially for aircraft protection. The outer material is medium weight and treated for water resistance, UV resistance and anti-static buildup. The inner lining is a very soft and smooth microfiber to prevent scratching. The material is very reflective, and tests show that the cabin interior temperature can be reduced to near-ambient temperature on the hottest of days. It is water, ice and snow repellent, yet breathable to allow moisture to escape from between the cover and the aircraft surface.

The **Windshield Cover** protects the windshield and is attached with straps to key locations. Details vary for different aircraft.

This cover type is made from Silver Acrylic Sunbrella canvas and is 100% lined with a soft and smooth microfiber. Bruce's Custom Covers developed this material combination especially for aircraft protection. The outer material is medium weight and treated for water resistance, UV resistance and anti-static buildup. The inner lining is a very soft and smooth microfiber to prevent scratching. The material is very reflective, and tests show that the cabin interior temperature can be reduced to near-ambient temperature on the hottest of days. It is water, ice and snow repellent, yet breathable to allow moisture to escape from between the cover and the aircraft surface.



Cessna 150 Extended Canopy, Wing, Prop, and Empennage Cover



Cessna 150 Extended Canopy Cover, also covers gas caps

Description	Part Number	Price
CANOPY COVER, Wrap-Around, (early models,1959-1963)	**150-010**	**$470.00**
CANOPY COVER, Wrap-Around	**150-020**	**$470.00**
WINDSHIELD COVER	**150-025**	**$265.00**
CANOPY COVER, over top type, extends to cover gas caps (early models,1959-1963)	**150-030**	**$520.00**
CANOPY COVER, over top type, extends to cover gas caps	**150-040**	**$520.00**
EXTENDED CANOPY COVER, over top type, extends to cover gas caps	**150-041**	**$650.00**
EXTENDED CANOPY COVER, over top type, extends to cover gas caps, hail protection type	**150-042**	**$760.00**
EXTENDED CANOPY COVER, over top type, extends to cover gas caps (early models,1959-1963), BELLY STRAP TYPE	**150-043**	**$650.00**
CANOPY/ENGINE COVER (standard canopy cover type)	**150-060**	**$820.00**
CANOPY/ENGINE COVER, over top type, extends to cover gas caps	**150-070**	**$945.00**
EXTENDED CANOPY/ENGINE COVER, Over-the-top type, extends to cover gas caps	**150-080**	**$1005.00**

Section 2: Engine/Prop Covers

Engine Covers will cinch around or behind the spinner, cover the entire engine cowl area including the engine air cooling and induction air inlets, and fastens together with Velcro beneath the spinner down the front of the cowling. The Engine Cover is attached with a belly strap aft of the firewall, and can Velcro to the Canopy Cover. Engine Covers are normally made from Solution-Dyed Polyester or Acrylic *Sunbrella*. An Insulated version of the engine cover can be made with a thicker, quilted, and water-repellent material. The Insulated Engine Cover works well in cold climates to help with engine preheating.

FOR INTERIOR USE - Protect your airplane's engine inside a cold winter hangar with our reasonably priced **Insulated Hangar Blanket**. While not as form fitting as our custom fit insulated engine covers, the **Hangar Blanket** will work wonders to help protect your engine when used with a heating device. AVAILABLE IN RED OR BLACK.

Insulated Covers Material - A special composite material of solution-dyed polyester, 3M Thinsulate insulation, and soft nylon interior fabric. Our insulated covers are designed to complement an engine preheater and help retain heat in the engine compartment after shutdown. If you operate your aircraft in cold-weather, these covers will help prevent engine wear and tear.

Sorry, custom flaps and preheater access is not available on the hangar blanketThe **Cessna 150 & 152 Insulated Engine Cover** works well in cold climates to help with engine preheating. You can add an access flap for an additional fee. It will cinch around or behind the spinner, cover the entire engine cowl area including the engine air inlets, and fastens together with Velcro beneath the spinner down the front of the cowling.

Insulated Covers Material - A special composite material of solution-dyed polyester, 3M Thinsulate insulation, and soft nylon interior fabric. Our insulated covers are designed to complement an engine preheater and help retain heat in the engine compartment after shutdown. If you operate your aircraft in cold-weather, these covers will help prevent engine wear and tear.

The **Cessna 150 & 152 Propeller Cover** is a one-piece design that form fits to the blades and spinner. The prop cover slips over the blades and spinner and is attached by a plastic all-weather zipper on the bottom of the blades. Propeller covers can be made for multiple numbers of blades, and for wooden, composite or metal props. The Propeller Cover is normally made from Acrylic *Sunbrella* or Solution-Dyed Polyester and is lined 100% with a soft and smooth microfiber. **Insulated Propeller Covers** works well in cold climates to help with engine preheating. These insulated versions are made with a thicker, quilted, water-repellent, and breathable material.

This cover type is made from Silver Acrylic Sunbrella canvas and is 100% lined with a soft and smooth microfiber. Bruce's Custom Covers developed this material combination especially for aircraft protection. The outer material is medium weight and treated for water resistance, UV resistance and anti-static buildup. The inner lining is a very soft and smooth microfiber to prevent scratching. The material is very reflective, and tests show that the cabin interior temperature can be reduced to near-ambient temperature on the hottest of days. It is water, ice and snow repellent, yet breathable to allow moisture to escape from between the cover and the aircraft surface.

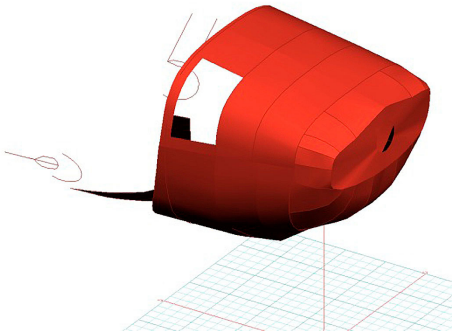

Cessna 150L Insulated Engine Cover, 3D model



Cessna 150 Canopy & Engine Covers

Description	Part Number	Price
ENGINE COVER, specify year & model	**150-126**	**$360.00**
INSULATED ENGINE COVER, specify year & model	**150-127**	**$480.00**
ENGINE COVER, hail protection, specify year & model	**150-128**	**$480.00**
ENGINE COVER, fully enclosed, specify year & model	**150-129**	**$420.00**
PROPELLOR/SPINNER COVER, 2 blade	**150-161**	**$175.00**
PROPELLOR/SPINNER COVER, 2 blade, hail protection on spinner	**150-162**	**$220.00**
INSULATED PROPELLOR/SPINNER COVER, 2 blade	**150-163**	**$235.00**
INSULATED HANGAR BLANKET, INTERIOR USE	**150-HB1**	**$300.00**

Section 3: Plugs & Protection

Cessna 150 & 152 Pitot Tube Covers, NOT HEAT RESISTANT TYPE, are made of Naugahyde vinyl, and are designed to cover the entire pitot assembly. Slipping over the tube, the cover tightens around the base with a Velcro strap detail. A "Remove Before Flight" streamer is attached to the cover. **Heat Resistant Pitot Covers** are an upgrade to this design, and help prevent the pitot cover from melting onto the tube if the pitot heat is accidentally turned on while installed. If you want the set tethered together, please let us know.

Engine Inlet Plugs are custom fit for your Cessna 150 & 152 intakes, made with heavy-duty vinyl material, and stuffed with a single block of sculpted urethane foam. Each plug has a zipper that allows the foam to be removed and dried if necessary. Engine plugs have warning flags that are visible from the cockpit or 'remove before flight' streamers sewn onto the face of the plugs. Most plugs are imprinted with the aircraft registration number in black for an extra charge. Storage bag NOT included. Engine plugs may be inserted after flight when the engine is still warm. **Engine Inlet Plugs are commonly referred to as Cowl Plugs, Intake Plugs, Cowl Blocks, Engine Blocks, and Engine Bungs.**



Cessna 150 Engine Inlet Plugs



Cessna 172 Bird Nest Problem

Description	Part Number	Price
ENGINE INLET PLUGS, specify year & model (set of 2)	**150-125**	**$190.00**
PITOT COVER	**150-HP2**	**$35.00**

Section 4: Wing/Tail/Empennage Covers

Horizontal Stabilizer Covers are a perfect solution to protect your paint from sun damage and prevent frost, snow, ice buildup, and corrosion. They are made from Solution-Dyed Polyester or Acrylic *Sunbrella*. They cover the entire upper surface of the stabilizers and overlap around the leading and trailing edges as well as the wing tip. The covers secure under each stabilizer with adjustable straps. In some instances, cut-outs are made in the trailing edge of the wing covers to accommodate for static wicks. **Horizontal Stabilizer Covers** for winter use or long-term all year use are usually available, and are normally made from Solution-Dyed Polyester or Acrylic *Sunbrella*. A Hail Protection version can be made which incorporates dense closed cell foam into the entire upper surface of the wing covers to help prevent hail damage. Although these covers are bulky, they do help protect your wing and control surfaces against small to medium-size hail.

ALL-YEAR USE MATERIAL - Made with Silver Acrylic Sunbrella canvas, the all-year use material is the best option for sun protection and cover longevity. This heavier more durable material is intended for all weather conditions, such as rain and snow or lots of sun.

WINTER USE MATERIAL - Made with Solution-Dyed Polyester fabric, this option is intended for seasonal use to aid in deicing, rain mitigation, or for occasional travel. The material is lighter and more compact, but more susceptible to UV damage and may have a shorter useful life if used continuously outside than the all-year use material.

The **Cessna 150 & 152 Empennage Cover** is a complete, one-piece cover which covers both the vertical and horizontal stabilizers, as well as the tailboom. It is normally made from *Solution-Dyed Polyester* or *Acrylic Sunbrella*. The cover attaches with adjustable

straps underneath the belly. The cover is pulled back over the vertical stabilizer and a plastic all-weather zipper is closed at the trailing edge of the rudder. The cover is then stretched over the elevators and zippered closed along the bottom outboard elevator surfaces. The covers cinch under the horizontal stabilizers using adjustable straps. All antennas, beacons and static wicks, if applicable, are accounted for in the design.

ALL-YEAR USE MATERIAL - Made with Silver Acrylic Sunbrella canvas, the all-year use material is the best option for sun protection and cover longevity. This heavier more durable material is intended for all weather conditions, such as rain and snow or lots of sun.

WINTER USE MATERIAL - Made with Solution-Dyed Polyester fabric, this option is intended for seasonal use to aid in deicing, rain mitigation, or for occasional travel. The material is lighter and more compact, but more susceptible to UV damage and may have a shorter useful life if used continuously outside than the all-year use material.

The **Cessna 150 & 152 Wing Covers** are a perfect solution to protect your paint from sun damage and prevent winter frost, snow, ice buildup, and corrosion. They are made from Solution-Dyed Polyester or Acrylic *Sunbrella* and form-fit to slip around each wing tip, cover the entire upper surface of the wing and wrap around the leading and trailing edges. The covers secure under the wing with adjustable straps from the trailing edge to the leading edge. The wing covers can also attach to each other with adjustable straps at the leading and trailing edges of the wing under the belly of the plane. In some instances, cut-outs are made in the trailing edge of the wing covers to accommodate static wicks. We have the ability to also accommodate wing tip modifications, such as STOL kits, droop tips, and vortex generators. Wing covers are labeled LEFT and RIGHT for your convenience. Wing Covers are available for winter use or long-term, all-year use. A Hail Protection version can be made which incorporates very dense closed cell foam into the entire upper surface of the wing covers to help prevent hail damage. Although these covers are bulky, they do help protect your wing and control surfaces against small to medium-size hail.

ALL-YEAR USE MATERIAL - Made with Silver Acrylic Sunbrella canvas, the all-year use material is the best option for sun protection and cover longevity. This heavier more durable material is intended for all weather conditions, such as rain and snow or lots of sun.

WINTER USE MATERIAL - Made with Solution-Dyed Polyester fabric, this option is intended for seasonal use to aid in deicing, rain mitigation, or for occasional travel. The material is lighter and more compact, but more susceptible to UV damage and may have a shorter useful life if used continuously outside than the all-year use material.



Cessna 150 Over-Top Canopy Cover, Wing Covers & Partial Empennage Cover



Cessna 150 Canopy, Engine, Wing & Empennage Covers

Description	Part Number	Price
WING COVERS, WINTER USE (set of 2)	**150-200**	**$480.00**
WING COVERS, ALL YEAR USE (set of 2)	**150-205**	**$725.00**
WING COVERS, padded for hail protection, WINTER USE (set of 2)	**150-230**	**$760.00**
WING COVERS, padded for hail protection, ALL YEAR USE (set of 2)	**150-235**	**$945.00**
HORIZONTAL STABILIZER COVERS, WINTER USE (set of 2)	**150-300**	**$155.00**

HORIZONTAL STABILIZER COVERS, ALL YEAR USE (set of 2)	**150-310**	**$240.00**
HORIZONTAL STABILIZER COVERS, padded for hail protection, WINTER USE (set of 2)	**150-311**	**$275.00**
HORIZONTAL STABILIZER COVERS, padded for hail protection, ALL YEAR USE (set of 2)	**150-312**	**$360.00**
TAILBOOM COVER (specify year and model), WINTER USE	**150-313**	**$360.00**
TAILBOOM COVER (specify year and model), ALL YEAR USE	**150-314**	**$480.00**
EMPENNAGE COVER, specify year & model, WINTER USE	**150-401**	**$630.00**
EMPENNAGE COVER, specify year & model, ALL YEAR USE	**150-402**	**$680.00**
EMPENNAGE COVER, hail protection, specify year & model, WINTER USE	**150-406**	**$825.00**
EMPENNAGE COVER, hail protection, specify year & model, ALL YEAR USE	**150-407**	**$950.00**

Section 5: HeatShields & Sun Reflectors

Heatshields are interior sunshades for an aircraft's windows or canopy glass. The product is a unique composite of closed-cell foam with a silver mylar finish. The semi-rigid design is stiff enough to stand along the inside of the windshield using sun visors or window framing. It folds up flat and easily stores in the included storage sleeve. Some designs may require velcro and suction cups. A Heatshield is an excellent short-term remedy for cockpit overheating.

Windshield Heatshields are interior sunshades for an aircraft's front windshield. The product is a unique composite of closed-cell foam with a silver mylar finish. The semi-rigid design is stiff enough to stand along the inside of the windshield using sun visors or window framing. It folds up flat and easily stores in the included storage sleeve. Some designs may require velcro and suction cups or split right and left sides. A Heatshield is an excellent short-term remedy for cockpit overheating. An external fabric cover is far more effective and practical for long-term protection.



Cessna 150 Cabin HeatShields



Cessna 180 Skywagon Windshield Heatshield, (W/ Compass)

Description	Part Number	Price
WINDSHIELD HEATSHIELD	**150-905**	**$110.00**
HEATSHIELD SET (w/o skylights) (set of 5)	**150-915**	**$265.00**
HEATSHIELD SET (w/skylights) (set of 7)	**150-917**	**$275.00**

Section 6: Miscellaneous Products

The **Cessna 150 & 152 Tailcone Cover** fits onto the tailcone area to cover the holes that birds can fly into and nest. The cover easily straps onto the leading edge of the horizontal stabilizer with padded hooks or overlaps with the elevators slightly and attaches

under the horizontal stabilizers with adjustable straps. Tailcone Covers are normally made with Solution-Dyed Polyester or Acrylic *Sunbrella*.

Description	Part Number	Price
WHEELPANT COVERS (set of 3)	**150-170**	**$275.00**
TIRE COVERS (specify tire size) (set of 3)	**150-175**	**$275.00**

Section 7: Light Weight Products: Travel Covers and FlyAway Covers

Canopy Covers help reduce damage to your airplane's upholstery and avionics caused by excessive heat, and they can eliminate problems caused by leaking door and window seals. They keep the windshield and window surfaces clean and help prevent vandalism and theft.

The **Cessna 150 & 152 Canopy Cover** is custom designed and fit for each model as well as your aircraft's specific antenna and possible temperature probe placements. The Canopy Cover is designed to enclose the windshield, side and rear window area. The Canopy Cover is a one-piece design, which wraps around the canopy and closes with Velcro behind the pilot's side door. The Velcro closure allows entry to the airplane without removing the entire cover. The Canopy Cover also attaches by two belly straps, one under the engine cowling and one under the tailboom. Belly straps are adjustable and detachable from either side using heavy-duty quick release plastic buckles. The buckles are padded to prevent scratching. To ensure the most secure fit, high-quality shock cord is enclosed in the hem of the cover to help keep the cover tighter against the airplane. Canopy Covers are commonly referred to as Cabin Covers, Fuselage Covers, Canvas Covers, etc.

Each Canopy Cover is custom sewn and the corners are trimmed to match the colors of the airplane. The airplane's registration number can be imprinted onto both sides of the cover for an additional charge. A duffle bag is included with all Canopy Covers.

This cover type is made from Silver Acrylic Sunbrella canvas and is 100% lined with a soft and smooth microfiber. Bruce's Custom Covers developed this material combination especially for aircraft protection. The outer material is medium weight and treated for water resistance, UV resistance and anti-static buildup. The inner lining is a very soft and smooth microfiber to prevent scratching. The material is very reflective, and tests show that the cabin interior temperature can be reduced to near-ambient temperature on the hottest of days. It is water, ice and snow repellent, yet breathable to allow moisture to escape from between the cover and the aircraft surface.

The **Lightweight Travel Canopy Cover** will cover the same area as our standard Canopy Cover, but the material used is very lightweight and will fold up and store in a much smaller space. This cover is ideal for the airplane that is stored in a hangar full-time and only needs a cover on rare occasions.

Travel Covers are made with Silver Solution-Dyed Polyester fabric and only lined over the windshield to save weight. The material is lightweight and more compact for easy stowage in the aircraft. The polyester material is water resistant, but only intended for occasional use outside. We also have an ultra lightweight material available for fitted hangar dust covers. For daily outdoor use, the non-travel Sunbrella Cover is the best choice.

The **Windshield Cover** protects the windshield and is attached with straps to key locations. Details vary for different aircraft.

This cover type is made from Silver Acrylic Sunbrella canvas and is 100% lined with a soft and smooth microfiber. Bruce's Custom Covers developed this material combination especially for aircraft protection. The outer material is medium weight and treated for water resistance, UV resistance and anti-static buildup. The inner lining is a very soft and smooth microfiber to prevent scratching. The material is very reflective, and tests show that the cabin interior temperature can be reduced to near-ambient temperature on the hottest of days. It is water, ice and snow repellent, yet breathable to allow moisture to escape from between the cover and the aircraft surface.



Cessna 150L Travel Cover, Over-Top Style



Cessna 150 Over-the-Top Canopy Cover

Description	Part Number	Price
TRAVEL COVER, Light Weight Canopy Cover, Wrap-Around, (early models,1959-1963) 6 lbs	**150-800**	**$375.00**
TRAVEL COVER, Light Weight Canopy Cover, Wrap-Around, 6 lbs	**150-820**	**$375.00**
TRAVEL COVER, Light Weight Travel Windshield Cover	**150-825**	**$240.00**
TRAVEL COVER, Light Weight Canopy Cover, Over-The-Top type, extends to cover gas caps	**150-850**	**$415.00**

Prices subject to change. Other Covers and Design Alterations: Prices on request.
Prices are FOB Morgan Hill, CA. Sales tax on orders shipped to California addresses. Orders take approximately 3 weeks to complete. For domestic orders we normally ship by UPS ground service. Next day shipping and air parcel post is available on request. We can take payment by Visa, Mastercard, American Express, or Discover.

Bruce's Custom Covers offers protective covers and plugs for virtually every type of airplane, jet and helicopter. If you have questions about our products please call any time TOLL FREE: 800/777-6405, or FAX: 408/738-2729.

BRUCE'S CUSTOM COVERS

A division of Aircraft Covers, Inc.

Propellor Cover Measuring Worksheet

Instructions: Measure to the nearest 1/8" and only fill in what applies. You may email, fax or phone in the measurements.

Aircraft Reg / Tail Number: _____ Aircraft Type: _____ Year: _____

Name: _____ Phone & Email:

Propellor Measurements

Please check one:	2 - Blade	3 - Blade	4 - Blade
A Measure along surface of cone			
B Measure "straight line" base to tip			
C Base to top of blade root opening			
D Provide diameter or circumference			
E Provide diameter or circumference			
F Blade root to prop tip			
G Trailing edge to leading edge			
H Trailing edge to leading edge			
J Trailing edge to leading edge			

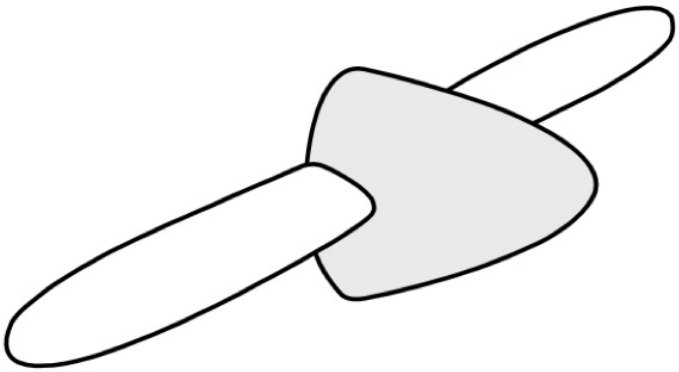

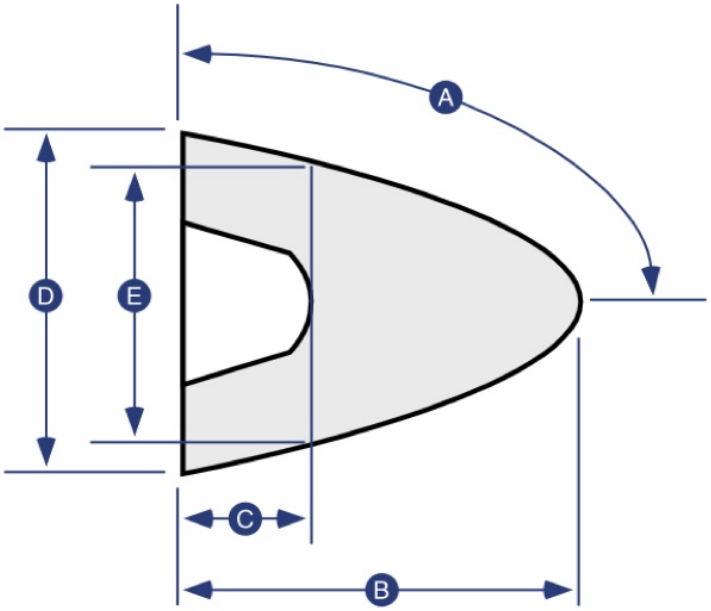

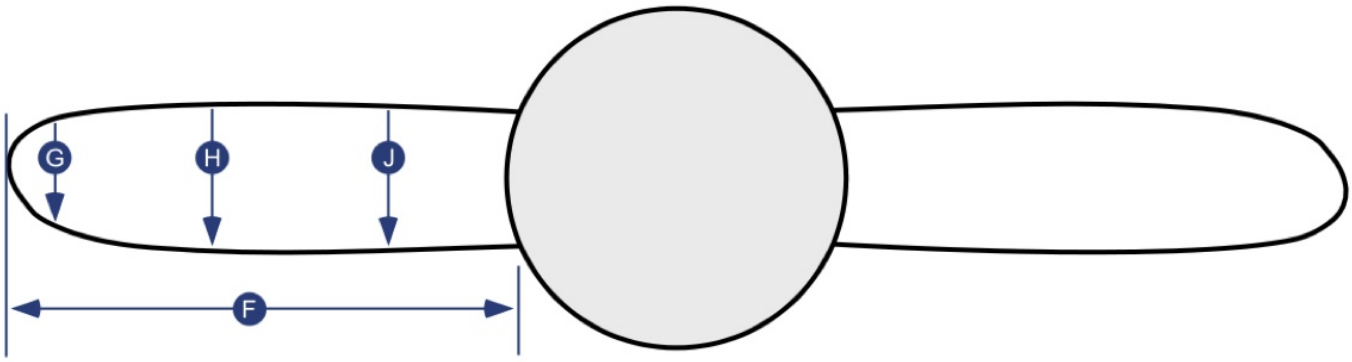

Ph: 408/738-3959 • Toll Free: 800/777-6405 • Fax: 408/738-2729 • bruce@aircraftcovers.com

BRUCE'S CUSTOM COVERS

A division of Aircraft Covers, Inc.

Canopy Cover Measuring Worksheet

(High-wing: Temperature Probe & Antennas)

Instructions: Measure to the nearest 1/8" and only fill in what applies. You may email, fax or phone in the measurements.

Aircraft Reg / Tail Number: _____ Aircraft Type: _____ Year: _____

Name: _____ Phone & Email: _____

OAT Placement

A	From top of windshield			
B	Offset from centerline			
	Left (pilot)	Center	Right (co-pilot)	
C	Height			
D	From FWD edge			
E	From lower edge			
F	From forward corner			
G	Distance forward			

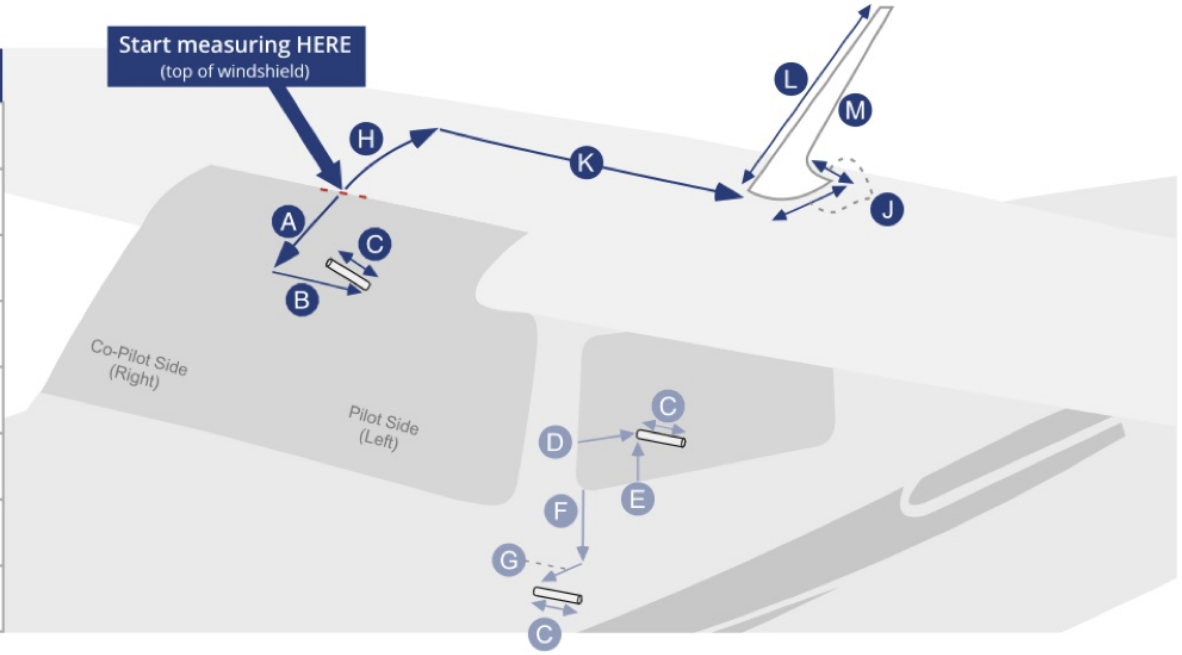

Antenna Placements	Example (inches or metric)	Antenna #1	Antenna #2	Antenna #3	Antenna #4
H Distance from top center windshield to front of Antenna	34 5/8"				
J Length/Width of Antenna base	5 1/2" x 3 1/4"				
K Offset from Centerline	9 1/2"				
Antenna Offset (mark one)	Left (pilot) / Center X / Right (co-pilot)	Left (pilot) / Center / Right (co-pilot)	Left (pilot) / Center / Right (co-pilot)	Left (pilot) / Center / Right (co-pilot)	Left (pilot) / Center / Right (co-pilot)
L Slope length of Antenna (types 1-3 only)	18"				
M Antenna Type (see types below)	1				

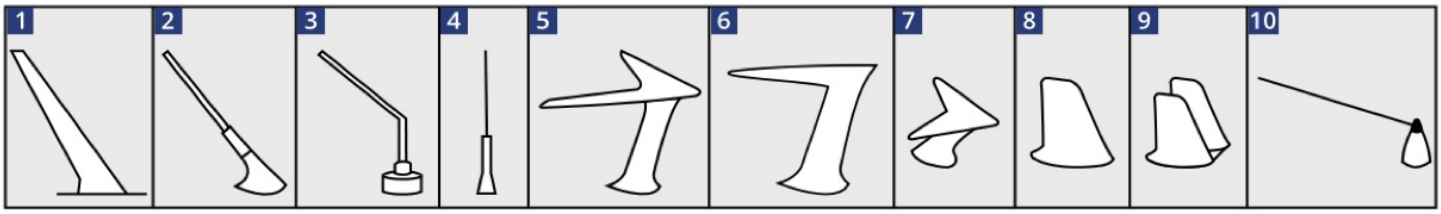

Ph: 408/738-3959 • Toll Free: 800/777-6405 • Fax: 408/738-2729 • bruce@aircraftcovers.com