BRUCE'S CUSTOM COVERS
A division of Aircraft Covers, Inc.

18850 Adams Ct
Morgan Hill, CA 95037
www.AircraftCovers.com

Phone: 408/738-3959
Toll Free (U.S.): 800/777-6405
Fax: 408/738-2729
Email: bruce@aircraftcovers.com

manufacturer of the finest custom-made aircraft covers

Tech Sheet: Boeing AH-64D Apache "Longbow"

(boeing-A64D.pdf)



Canopy/Nose Cover, covers canopy glass and TADS

Section 1: Cockpit/Bubble Covers

The **Boeing AH-64D Apache "Longbow" Canopy/Nose Cover** helps reduce damage to the upholstery and avionics caused by excessive heat and can eliminate problems caused by leaking door and window seals. They keep the windshield and window surfaces clean and help prevent vandalism and theft.

Canopy/Nose Covers enclose the entire canopy including the windshield, skylights, and chin bubble. Attachment buckles are made of nonmetal *Delrin*, designed for rugged outdoor use. Both the top and bottom hems of the cover have a special rope-hem feature with which they can be tightened to help prevent abrasive chafing of the windshield. Pockets are sewn into the cover for the temperature probe and pitot tubes. The bubble cover is reinforced with patches at hinge points, door handles, and for the windshield wipers. For ease of installation, the bubble cover is color-coded (red=left, green=right) with color swatches sewn into the cornersThis cover type is made from Silver Acrylic Sunbrella canvas and is 100% lined with a soft and smooth microfiber. Bruce's Custom Covers developed this material combination especially for aircraft protection. The outer material is medium weight and treated for water resistance, UV resistance and anti-static buildup. The inner lining is a very soft and smooth microfiber to prevent scratching. The material is very reflective, and tests show that the cabin interior temperature can be reduced to near-ambient temperature on the hottest of days. It is water, ice and snow repellent, yet breathable to allow moisture to escape from between the cover and the aircraft surface.



Canopy/Nose Cover, covers canopy glass and TADS

Description	Part Number	Price
CANOPY/NOSE COVER	**A64D-000**	**Contact Us**

Section 2: Engine/Tail Rotor Covers

Blade Tie-Downs are "socks" which fit over the blade tip with or without Blade Covers installed. Front blade tie-downs have two lengths of rope or strap which attaches to the front cross tubes on either side of the cabin. The other tie-downs have generous lengths of rope or strap to tie the blades down at any convenient spot.

Engine Cover details vary by model, but generally these covers are designed to enclose and protect the swash plate, inlet, exhaust and engine access areas. They are designed to tighten up around the main rotor drive shaft and tailboom bottleneck areas, and attach securely with straps either under the belly or to the land gear cross tubes (or both). *Delrin* buckles are used to tighten the attachment straps. The engine cover is made of Solution-Dyed Polyester or acrylic *Sunbrella*, and is available in a variety of colors ([contact us for details](/contact). Specific information for each model is available on request.

Rotor Hub Covers overlaps with the Blade Covers to ensure complete protection for the entire main rotor system. Designed like a jacket with sleeves and no collar, the rotor hub cover fastens together below each blade with *Delrin* buckles. The Rotor Hub Cover is normally made from Solution-Dyed Polyester.

Bruce's **Boeing AH-64D Apache "Longbow" Blade Covers** are made of medium-weight Solution-Dyed Polyester and designed to avoid trim tabs or wicks. You can install Blade Covers from the ground with the aid of a lightweight rope attached to the open end. Covers are cinched tight at the blade root with straps and quick-release plastic buckles. The **Cold Weather Blade Covers** are fitted with full-length zippers and optional deice "boots" designed to accept a preheater hose; a small opening at the tip of the cover allows for some air circulation and drainage in freezing weather. Some part numbers have features for an extra charge.

The **Boeing AH-64D Apache "Longbow" Insulated Engine Cover** works well in cold climates to help with engine preheating. You can add an access flap for an additional fee. It will cinch around or behind the spinner, cover the entire engine cowl area including the engine air inlets, and fastens together with Velcro beneath the spinner down the front of the cowling.

Insulated Covers Material - A special composite material of solution-dyed polyester, 3M Thinsulate insulation, and soft nylon interior fabric. Our insulated covers are designed to complement an engine preheater and help retain heat in the engine compartment after shutdown. If you operate your aircraft in cold-weather, these covers will help prevent engine wear and tear.

The **Boeing AH-64D Apache "Longbow" Tail Rotor Cover** is a one-piece design which encloses both the blades and their hub, snapping closed along the bottom edge. The tail rotor cover is normally made from Solution-Dyed Polyester.

ALL-YEAR USE MATERIAL - Made with Silver Acrylic Sunbrella canvas, the all-year use material is the best option for sun protection and cover longevity. This heavier more durable material is intended for all weather conditions, such as rain and snow or lots of sun.

WINTER USE MATERIAL - Made with Solution-Dyed Polyester fabric, this option is intended for seasonal use to aid in deicing, rain

mitigation, or for occasional travel. The material is lighter and more compact, but more susceptible to UV damage and may have a shorter useful life if used continuously outside than the all-year use material.

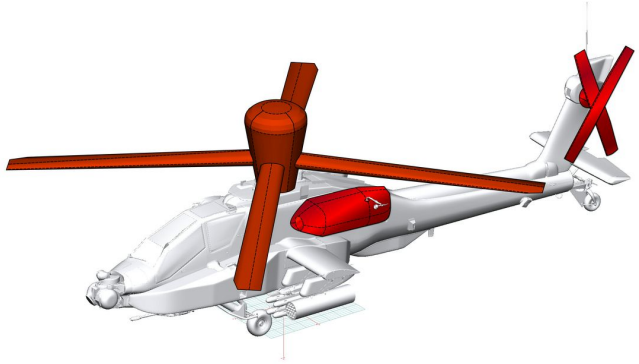

Boeing AH-64D Cold Weather Covers, illustration

Description	Part Number	Price
ENGINE COVERS	**A64D-100**	**Contact Us**
INSULATED ENGINE COVERS	**A64D-105**	**Contact Us**
ROTOR HUB COVER	**A64D-200**	**Contact Us**
INSULATED ROTOR HUB COVER	**A64D-201**	**Contact Us**
BLADE COVERS (set of 4)	**A64D-300**	**Contact Us**
INSULATED BLADE COVERS, cold weather (E-model) (set of 4)	**A64D-310**	**Contact Us**
BLADE COVERS, cold weather (priced separately)	**A64D-311**	**Contact Us**
BLADE TIE-DOWNS (fabric type) (set of 4)	**A64D-320**	**Contact Us**
TAIL ROTOR BLADE COVERS (set of 4)	**A64D-400**	**Contact Us**
TAIL ROTOR COVER	**A64D-402**	**Contact Us**
INSULATED TAIL ROTOR COVER	**A64D-403**	**Contact Us**
INSULATED TAIL ROTOR BLADE COVERS, cold weather (set of 4)	**A64D-404**	**Contact Us**

Section 4: Tailboom Covers

Description	Part Number	Price
HORIZONTAL STABILIZER COVER, PADDED	**A64D-350**	**Contact Us**

Section 5: HeatShields & Sun Reflectors

Cockpit Heatshields are interior sunshades for the aircraft's cockpit. The product is a unique composite of closed-cell foam with a silver mylar finish. The semi-rigid design is stiff enough to stand inside the window framing. Darts and folds are incorporated into the material so that it conforms to the complex shape of the helicopter windows. The set folds up flat and is easily stored in the included storage sleeve. Some designs may require velcro and suction cups. A Heatshield is an excellent short-term remedy for cockpit overheating, but an external fabric cover is more effective for long-term protection.

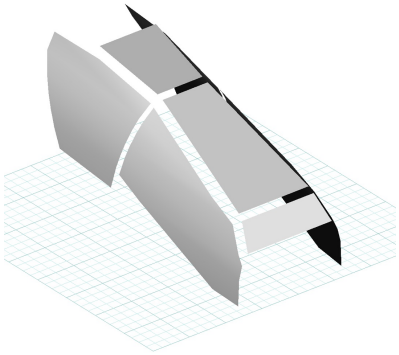

AH-64D Cockpit HeatShields (3D Model)

Description	Part Number	Price
COCKPIT HEATSHIELDS (set of 7)	**A64D-900**	**Contact Us**

Section 6: Miscellaneous Products

Description	Part Number	Price
TADS/PNVS TURRET COVER	**A64D-500**	**Contact Us**
HELLFIRE MISSILE COVERS (set of 2)	**A64D-510**	**Contact Us**
AH-64, M230 Full Gun Cover	**A64D-522**	**Contact Us**
CMWS DISPENSER COVER	**A64D-600**	**Contact Us**
AH-64, CMWS Flare Dispenser, Left Side	**A64D-601**	**Contact Us**
AH-64, CMWS Flare Dispenser, Right Side	**A64D-602**	**Contact Us**

Prices subject to change. Other Covers and Design Alterations: Prices on request.
Prices are FOB Morgan Hill, CA. Sales tax on orders shipped to California addresses. Orders take approximately 3 weeks to complete. For domestic orders we normally ship by UPS ground service. Next day shipping and air parcel post is available on request. We can take payment by Visa, Mastercard, American Express, or Discover.

Bruce's Custom Covers offers protective covers and plugs for virtually every type of airplane, jet and helicopter. If you have questions about our products please call any time TOLL FREE: 800/777-6405, or FAX: 408/738-2729.

BRUCE'S CUSTOM COVERS

A division of Aircraft Covers, Inc.

18850 Adams Ct.
Morgan Hill, CA 95037
www.AircraftCovers.com

Aircraft Cover Ordering Form

Customer Info

Name _____

Shipping Address _____

_____

Phone & Email _____

Payment

Credit Card Number ☐☐☐☐☐☐☐☐☐☐☐☐☐☐☐☐

Exp. Date ☐☐ / ☐☐ V-Code* ☐☐☐☐

**Visa, Mastercard, Discover: last 3 numbers on back of card, right of signature. Amex: 4 smaller numbers printed on face of card.*

A/C Info

Reg / Tail Number: _____ Aircraft Type: _____ Year: _____

Colors / Paint Scheme (be specific): _____

Please specify below the items you would like to order.

See technical sheet or visit our website for part numbers (or just fill in the description)

	Part Number	Quant	Description	Price
1				
2				
3				
4				
5				
6				
7				
8				
9				
10				
			TOTAL	

Optional Items (check the box of the item you want)

☐ ***Imprint** aircraft registration number onto both sides of canopy cover.....$35.00*

☐ ***Imprint** aircraft registration number onto Jet intake covers.....$55.00*

Ph: 408/738-3959 • Toll Free: 800/777-6405 • Fax: 408/738-2729 • bruce@aircraftcovers.com