BRUCE'S CUSTOM COVERS
A division of Aircraft Covers, Inc.

18850 Adams Ct
Morgan Hill, CA 95037
www.AircraftCovers.com

Phone: 408/738-3959
Toll Free (U.S.): 800/777-6405
Fax: 408/738-2729
Email: bruce@aircraftcovers.com

*manufacturer of the finest custom-made aircraft covers*

# Tech Sheet: Northrop Grumman Firebird

(northrop-grumman-FBD.pdf)

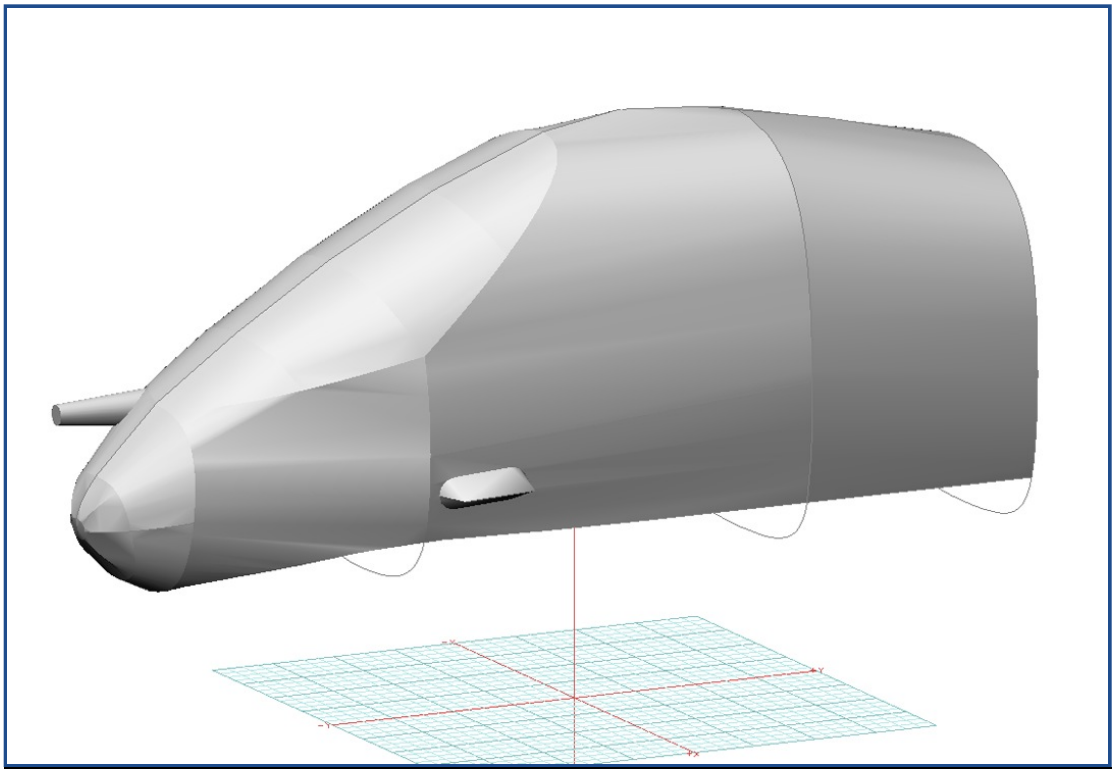

Northrup Grumman Firebird Canopy Cover (3D Model)

## Section 1: Canopy/Cockpit/Fuselage Covers

**Canopy Covers** help reduce damage to your airplane's upholstery and avionics caused by excessive heat, and they can eliminate problems caused by leaking door and window seals. They keep the windshield and window surfaces clean and help prevent vandalism and theft.

The **Northrop Grumman Firebird Canopy Cover** is designed to enclose the windshield, all side windows and canopy roof. The Canopy Cover is custom designed for each model, as well as your aircraft's specific antenna and temperature probe placements. The Canopy Cover attaches using adjustable "belly straps", which run under the belly and connect to the other side of the cover with a quick-release plastic buckle. To ensure the most secure fit, high-quality shock cord is enclosed in the hem of the cover to help keep the cover tighter against the airplane. Canopy Covers are commonly referred to as Cabin Covers, Fuselage Covers, Canvas Covers, Canopy Caps, etc.

Each Canopy Cover is custom sewn and the corners are trimmed to match the colors of the airplane. The airplane's registration number can be imprinted onto both sides of the cover for an additional charge. A duffle bag is included with all Canopy Covers.

This cover type is made from Silver Acrylic Sunbrella canvas and is 100% lined with a soft and smooth microfiber. Bruce's Custom Covers developed this material combination especially for aircraft protection. The outer material is medium weight and treated for water resistance, UV resistance and anti-static buildup. The inner lining is a very soft and smooth microfiber to prevent scratching. The material is very reflective, and tests show that the cabin interior temperature can be reduced to near-ambient temperature on the hottest of days. It is water, ice and snow repellent, yet breathable to allow moisture to escape from between the cover and the aircraft surface.

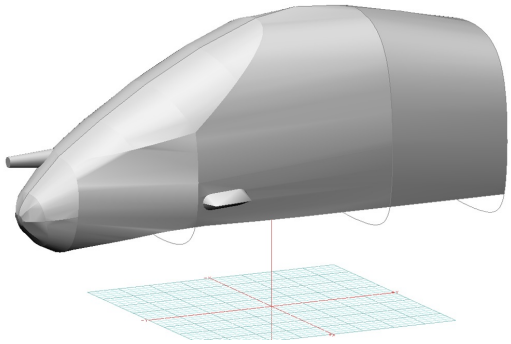

Northrup Grumman Firebird Canopy Cover (3D Model)

| Description | Part Number | Price |
|---|---|---|
| CANOPY COVER (single seat model) | **FBD-000** | **Contact Us** |
| CANOPY COVER (dual seat model) | **FBD-002** | **Contact Us** |

## Section 3: Plugs & Protection

**Engine Exhaust Plugs** are custom fit for your Northrop Grumman Firebird exhaust openings, made with heavy-duty vinyl material, and stuffed with a single block of sculpted urethane foam. Exhaust plugs have 'remove before flight' streamers sewn onto the face of the plugs. Exhaust plugs may be inserted soon after flight when the engine is still warm. Engine Inlet Plugs are commonly referred to as Cowl Plugs, Intake Plugs, Cowl Blocks, Engine Blocks, and Engine Bungs.

**Engine Inlet Plugs** are custom fit for your Northrop Grumman Firebird intakes, made with heavy-duty vinyl material, and stuffed with a single block of sculpted urethane foam. Each plug has a zipper that allows the foam to be removed and dried if necessary. Engine plugs have warning flags that are visible from the cockpit or 'remove before flight' streamers sewn onto the face of the plugs. Most plugs are imprinted with the aircraft registration number in black for an extra charge. Storage bag NOT included. Engine plugs may be inserted after flight when the engine is still warm. **Engine Inlet Plugs are commonly referred to as Cowl Plugs, Intake Plugs, Cowl Blocks, Engine Blocks, and Engine Bungs.**

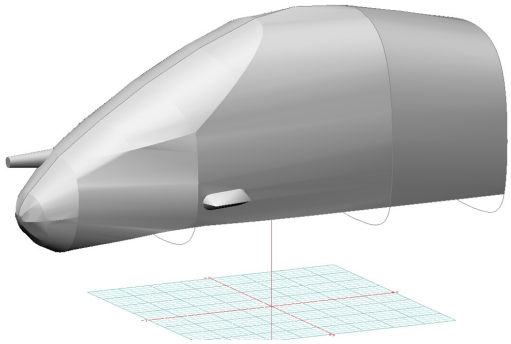

Northrup Grumman Firebird Canopy Cover (3D Model)

| Description | Part Number | Price |
|---|---|---|
| INTAKE PLUGS, UPPER INLETS (dual seat model) (set of 2) | **FBD-100** | **Contact Us** |
| INTAKE PLUGS, SIDE INLETS (dual seat model) (set of 8) | **FBD-103** | **Contact Us** |
| EXHAUST PLUGS (dual seat model) (set of 3) | **FBD-120** | **Contact Us** |

## Section 6: Miscellaneous Products

| Description | Part Number | Price |
|---|---|---|
| Ultra Wide-band VHF/UHF Airborne Blade Antenna Cover (set of 2) | **FBD-500** | **Contact Us** |

## Section 7: Light Weight Products: Travel Covers and FlyAway Covers

The **Lightweight Travel Canopy Cover** will cover the same area as our standard Canopy Cover, but the material used is very lightweight and will fold up and store in a much smaller space. This cover is ideal for the airplane that is stored in a hangar full-time and only needs a cover on rare occasions.

Travel Covers are made with Silver Solution-Dyed Polyester fabric and only lined over the windshield to save weight. The material is lightweight and more compact for easy stowage in the aircraft. The polyester material is water resistant, but only intended for occasional use outside. We also have an ultra lightweight material available for fitted hangar dust covers. For daily outdoor use, the non-travel Sunbrella Cover is the best choice.

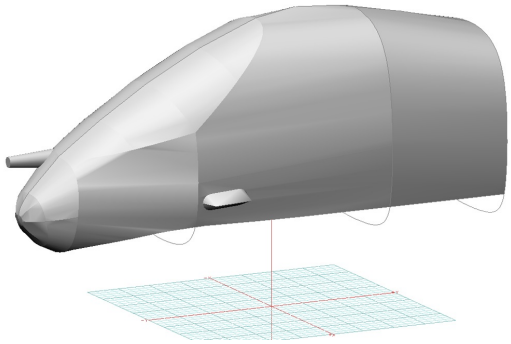

Northrup Grumman Firebird Canopy Cover (3D Model)

| Description | Part Number | Price |
|---|---|---|
| TRAVEL COVER, Light Weight Canopy Cover (single seat model) | **FBD-800** | **Contact Us** |
| TRAVEL COVER, Light Weight Canopy Cover (dual seat model) | **FBD-805** | **Contact Us** |

## Section 10: Inside the Hangar

Designed to prevent damage to the aircraft extremities in crowded hangars, these products are made of bright red Naugahyde and thickly padded with a sandwich of closed cell foam. Nowadays they are also made using bright read Neoprene padded laminted (think: wetsuit material).

| Description | Part Number | Price |
|---|---|---|
| PROPELLOR PADS (set of 5) | **FBD-150** | **Contact Us** |

***Prices subject to change. Other Covers and Design Alterations: Prices on request.***
***Prices are FOB Morgan Hill, CA. Sales tax on orders shipped to California addresses. Orders take approximately 3 weeks to complete. For domestic orders we normally ship by UPS ground service. Next day shipping and air parcel post is available on request. We can take payment by Visa, Mastercard, American Express, or Discover.***

***Bruce's Custom Covers offers protective covers and plugs for virtually every type of airplane, jet and helicopter. If you***

***have questions about our products please call any time TOLL FREE: 800/777-6405, or FAX: 408/738-2729.***

BRUCE'S CUSTOM COVERS

*A division of Aircraft Covers, Inc.*

18850 Adams Ct.
Morgan Hill, CA 95037
**www.AircraftCovers.com**

# Aircraft Cover Ordering Form

**Customer Info**

Name _____

Shipping Address _____

_____

Phone & Email _____

**Payment**

Credit Card Number ☐☐☐☐☐☐☐☐☐☐☐☐☐☐☐☐

Exp. Date ☐☐ / ☐☐ V-Code* ☐☐☐☐

**Visa, Mastercard, Discover: last 3 numbers on back of card, right of signature. Amex: 4 smaller numbers printed on face of card.*

**A/C Info**

Reg / Tail Number: _____ Aircraft Type: _____ Year: _____

Colors / Paint Scheme (be specific): _____

**Please specify below the items you would like to order.**
See technical sheet or visit our website for part numbers (or just fill in the description)

| | Part Number | Quant | Description | Price |
|---|---|---|---|---|
| 1 | | | | |
| 2 | | | | |
| 3 | | | | |
| 4 | | | | |
| 5 | | | | |
| 6 | | | | |
| 7 | | | | |
| 8 | | | | |
| 9 | | | | |
| 10 | | | | |
| | | | TOTAL | |

***Optional Items (check the box of the item you want)***

☐ ***Imprint** aircraft registration number onto both sides of canopy cover.....$35.00*

☐ ***Imprint** aircraft registration number onto Jet intake covers.....$55.00*

**Ph: 408/738-3959 • Toll Free: 800/777-6405 • Fax: 408/738-2729 • bruce@aircraftcovers.com**