BRUCE'S CUSTOM COVERS
A division of Aircraft Covers, Inc.

18850 Adams Ct
Morgan Hill, CA 95037
www.AircraftCovers.com

Phone: 408/738-3959
Toll Free (U.S.): 800/777-6405
Fax: 408/738-2729
Email: bruce@aircraftcovers.com

manufacturer of the finest custom-made aircraft covers

Tech Sheet: Scheibe All Models except SF-25 & SF-28

(scheibe-SCB.pdf)



Grob 102 Astir CS Canopy/Nose Cover (test fit)

Section 1: Glider Canopy/Cockpit/Fuselage Covers

Turtledeck Extension adds more cover material to the aft edge of the Canopy/Nose Cover, providing custom coverage for antennas, solar panels or motorglider bay doors.

This cover type is made from Silver Acrylic Sunbrella canvas and is 100% lined with a soft and smooth microfiber. Bruce's Custom Covers developed this material combination especially for aircraft protection. The outer material is medium weight and treated for water resistance, UV resistance and anti-static buildup. The inner lining is a very soft and smooth microfiber to prevent scratching. The material is very reflective, and tests show that the cabin interior temperature can be reduced to near-ambient temperature on the hottest of days. It is water, ice and snow repellent, yet breathable to allow moisture to escape from between the cover and the aircraft surface.



DG-505 Full Cover Set

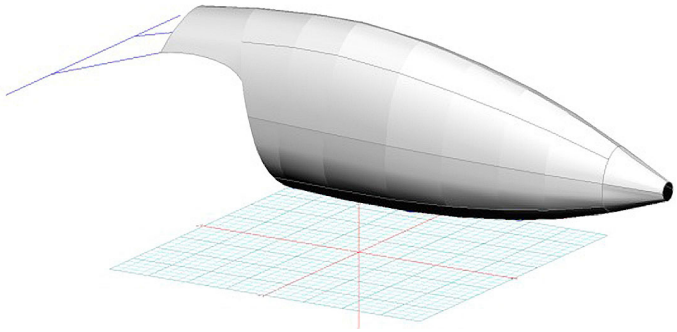

ASW-20 Canopy/Nose Cover, 3D model

Description	Part Number	Price
CANOPY/NOSE COVER, SF-27, all year use	**SCB-000**	**$480.00**
CANOPY/NOSE COVER, Bergfalke, all year use	**SCB-001**	**$480.00**
CANOPY/ENGINE COVER, SF-24 Motorspatz, all year use	**SCB-002**	**$480.00**
CANOPY/NOSE COVER, Spatz, all year use	**SCB-003**	**$480.00**
CANOPY/NOSE COVER, Zugvogel, all year use	**SCB-004**	**$480.00**
TURTLEDECK EXT, antennas, solar panels, motor bay	**SCB-095**	**$95.00**

Section 4: Glider Wing/Tail/Empennage Covers

All Weather Wing Covers are a perfect solution to protect your paint from sun damage and prevent winter frost, snow, ice buildup, and corrosion. They are made from Solution-Dyed Polyester or Acrylic *Sunbrella* and form-fit to slip around each wing tip, cover the entire upper surface of the wing and wrap around the leading and trailing edges. The covers secure under the wing with adjustable straps from the trailing edge to the leading edge. The wing covers can also attach to each other with adjustable straps at the leading and trailing edges of the wing under the belly of the plane. Wing covers are labeled LEFT and RIGHT for installation convenience. Wing Covers are available for travel use or long-term, all year use.

ALL-YEAR USE MATERIAL - Made with Silver Acrylic Sunbrella canvas, the all-year use material is the best option for sun protection and cover longevity. This heavier more durable material is intended for all weather conditions, such as rain and snow or lots of sun.

WINTER USE MATERIAL - Made with Solution-Dyed Polyester fabric, this option is intended for seasonal use to aid in deicing, rain mitigation, or for occasional travel. The material is lighter and more compact, but more susceptible to UV damage and may have a shorter useful life if used continuously outside than the all-year use material.

All Weather Horizontal Stabilizer Covers are a perfect solution to protect your paint from sun damage and prevent frost, snow, ice buildup, and corrosion. They are made from Solution-Dyed Polyester or Acrylic *Sunbrella*. They cover the entire upper surface of the stabilizers and overlap around the leading and trailing edges as well as the wing tip. The covers secure under each stabilizer with adjustable straps. In some instances, cut-outs are made in the trailing edge of the wing covers to accommodate static wicks. Horizontal Stabilizer Covers are available for winter use or long-term all year use, and are normally made from Solution-Dyed Polyester or Acrylic *Sunbrella*. A Hail Protection version can be made which incorporates dense closed cell foam into the entire upper surface of the wing covers to help prevent hail damage. Although these covers are bulky, they do help protect your wing and control surfaces against small to medium-size hail.

ALL-YEAR USE MATERIAL - Made with Silver Acrylic Sunbrella canvas, the all-year use material is the best option for sun protection and cover longevity. This heavier more durable material is intended for all weather conditions, such as rain and snow or lots of sun.

WINTER USE MATERIAL - Made with Solution-Dyed Polyester fabric, this option is intended for seasonal use to aid in deicing, rain mitigation, or for occasional travel. The material is lighter and more compact, but more susceptible to UV damage and may have a shorter useful life if used continuously outside than the all-year use material.

The **Scheibe All Models except SF-25 & SF-28 Empennage Cover** is a complete, one-piece cover which covers both the vertical and horizontal stabilizers, as well as the tailboom. It is normally made from *Solution-Dyed Polyester* or *Acrylic Sunbrella*. The cover attaches with adjustable straps underneath the belly. The cover is pulled back over the vertical stabilizer and a plastic all-weather zipper is closed at the trailing edge of the rudder. The cover is then stretched over the elevators and zippered closed along the bottom outboard elevator surfaces. The covers cinch under the horizontal stabilizers using adjustable straps. All antennas, beacons and static wicks, if applicable, are accounted for in the design.

ALL-YEAR USE MATERIAL - Made with Silver Acrylic Sunbrella canvas, the all-year use material is the best option for sun protection and cover longevity. This heavier more durable material is intended for all weather conditions, such as rain and snow or lots of sun.

WINTER USE MATERIAL - Made with Solution-Dyed Polyester fabric, this option is intended for seasonal use to aid in deicing, rain mitigation, or for occasional travel. The material is lighter and more compact, but more susceptible to UV damage and may have a shorter useful life if used continuously outside than the all-year use material.

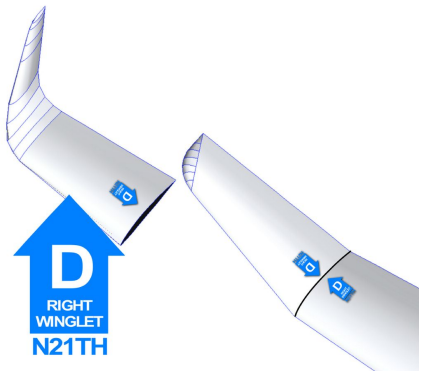

Sailplane Full Cover Set Graphic Indicators (Discus 2B, 3D model)



DG-505 Canopy/Nose, Wing, Empennage & Horiz. Stab. Covers

Description	Part Number	Price
WING COVERS, 15 meter wingspan, all year use (set of 2)	**SCB-200**	**$820.00**
WING COVERS, 18 meter wingspan, all year use (set of 2)	**SCB-210**	**$985.00**
HORIZONTAL STABILIZER COVER, all year use	**SCB-300**	**$340.00**
EMPENNAGE COVER, incl. horiz. stab., all year use (set of 2)	**SCB-400**	**$735.00**

Section 10: Inside the Hangar

Designed to prevent damage to the aircraft extremities in crowded hangars, these products are made of bright red Naugahyde and thickly padded with a sandwich of closed cell foam. Nowadays they are also made using bright read Neoprene padded laminted (think: wetsuit material).



Schleicher ASH Wingtip Pads



Discus CS Wingtip Pads (Set of 2)

Description	Part Number	Price
WINGTIP PADS (set of 2)	**SCB-280**	**$255.00**

Prices subject to change. Other Covers and Design Alterations: Prices on request.
Prices are FOB Morgan Hill, CA. Sales tax on orders shipped to California addresses. Orders take approximately 3 weeks to complete. For domestic orders we normally ship by UPS ground service. Next day shipping and air parcel post is available on request. We can take payment by Visa, Mastercard, American Express, or Discover.

Bruce's Custom Covers offers protective covers and plugs for virtually every type of airplane, jet and helicopter. If you have questions about our products please call any time TOLL FREE: 800/777-6405, or FAX: 408/738-2729.

BRUCE'S CUSTOM COVERS

A division of Aircraft Covers, Inc.

Propellor Cover Measuring Worksheet

Instructions: Measure to the nearest 1/8" and only fill in what applies. You may email, fax or phone in the measurements.

Aircraft Reg / Tail Number: _____ Aircraft Type: _____ Year: _____

Name: _____ Phone & Email:

Propellor Measurements

Please check one:	2 - Blade	3 - Blade	4 - Blade
A Measure along surface of cone			
B Measure "straight line" base to tip			
C Base to top of blade root opening			
D Provide diameter or circumference			
E Provide diameter or circumference			
F Blade root to prop tip			
G Trailing edge to leading edge			
H Trailing edge to leading edge			
J Trailing edge to leading edge			

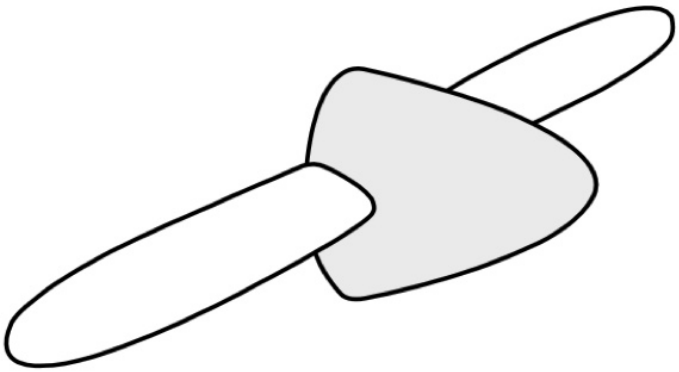

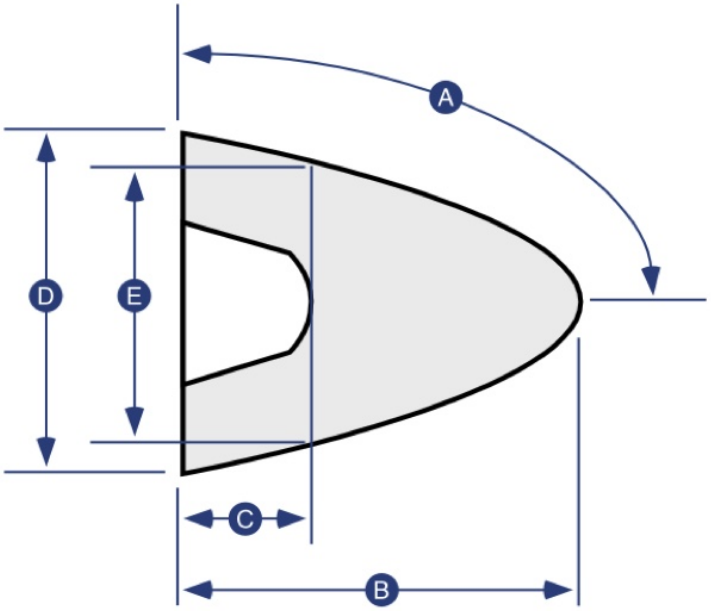

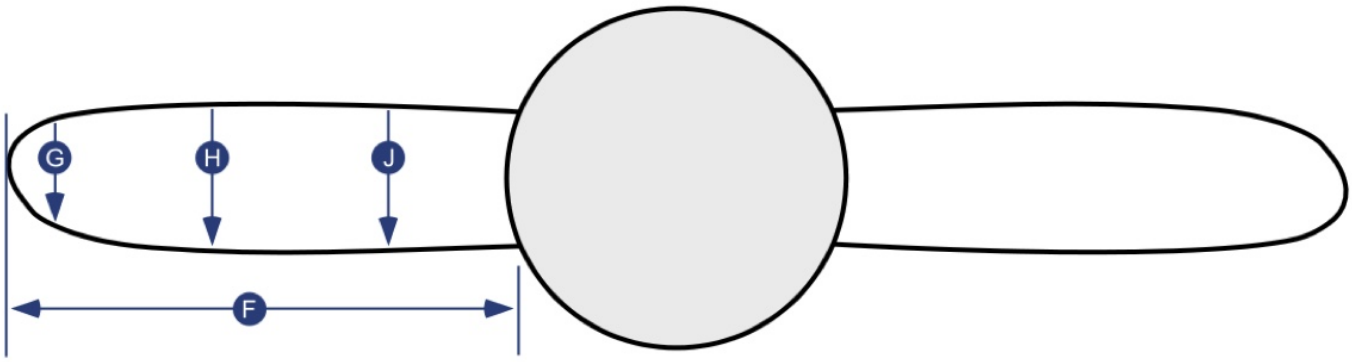

Ph: 408/738-3959 • Toll Free: 800/777-6405 • Fax: 408/738-2729 • bruce@aircraftcovers.com

BRUCE'S CUSTOM COVERS

A division of Aircraft Covers, Inc.

18850 Adams Ct.
Morgan Hill, CA 95037
www.AircraftCovers.com

Aircraft Cover Ordering Form

Customer Info

Name _____

Shipping Address _____

_____

Phone & Email _____

Payment

Credit Card Number ☐☐☐☐☐☐☐☐☐☐☐☐☐☐☐☐

Exp. Date ☐☐ / ☐☐ V-Code* ☐☐☐☐

**Visa, Mastercard, Discover: last 3 numbers on back of card, right of signature. Amex: 4 smaller numbers printed on face of card.*

A/C Info

Reg / Tail Number: _____ Aircraft Type: _____ Year: _____

Colors / Paint Scheme (be specific): _____

Please specify below the items you would like to order.

See technical sheet or visit our website for part numbers (or just fill in the description)

	Part Number	Quant	Description	Price
1				
2				
3				
4				
5				
6				
7				
8				
9				
10				
			TOTAL	

Optional Items (check the box of the item you want)

☐ ***Imprint** aircraft registration number onto both sides of canopy cover.....$30.00*

☐ ***Imprint** aircraft registration number onto Jet intake covers.....$50.00*

Ph: 408/738-3959 • Toll Free: 800/777-6405 • Fax: 408/738-2729 • bruce@aircraftcovers.com